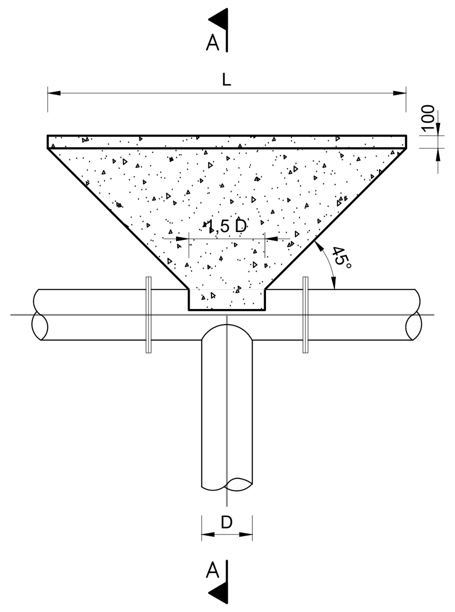

PLAN VIEW
SCALE 1:20

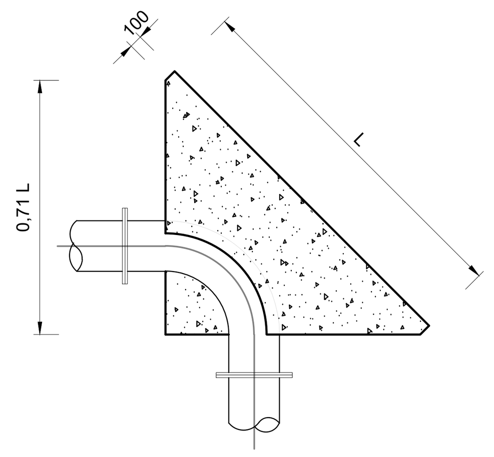

PLAN VIEW
SCALE 1:20

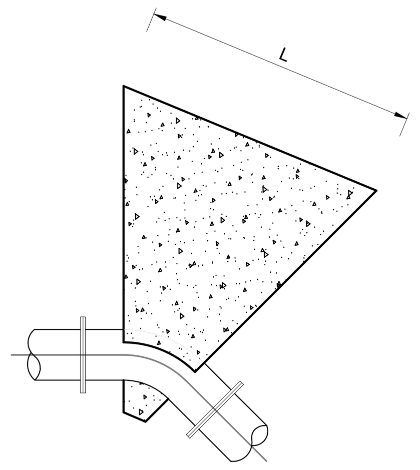

PLAN VIEW
SCALE 1:20

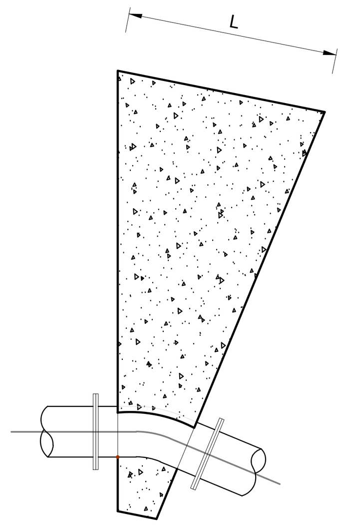

PLAN VIEW
SCALE 1:20

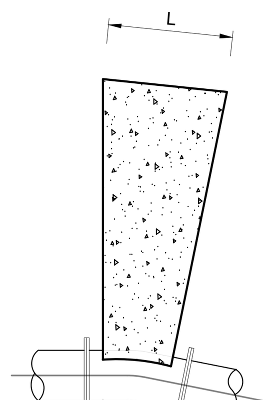

PLAN VIEW
SCALE 1:20

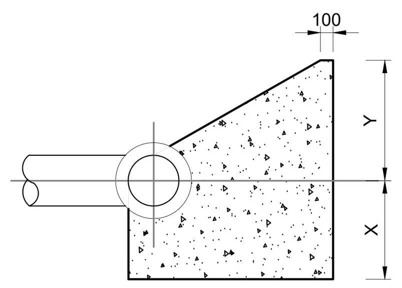

SECTION A – A
90° TEE

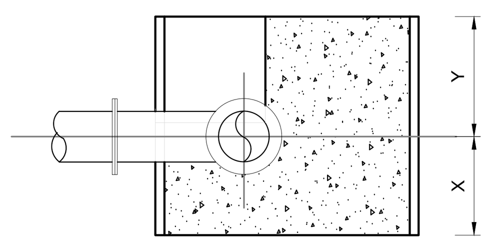

ELEVATION
90° BEND

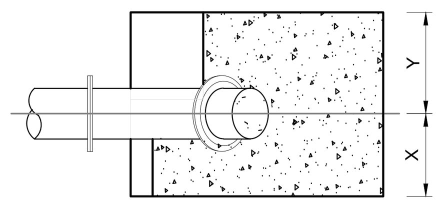

ELEVATION
45° BEND

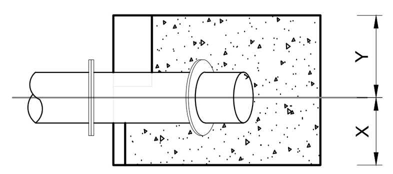

ELEVATION
22,5° BEND

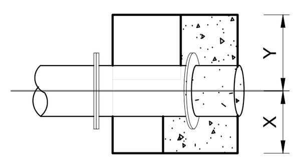

ELEVATION
11,25° BEND

NOTES :

1. THESE THRUST BLOCKS ARE DESIGNED TO SUIT FOLLOWING SOIL CONDITIONS :
   - SOIL – GRAVELLY SAND
   - UNIT WEIGHT – 19 kN/m
   - ANGLE OF FRICTION – 32°
   - COHESION FACTOR – 0 kPa
   - SAFE BEARING CAPACITY – 300 kPa

   SHOULD THE ON SITE SOIL CONDITIONS DIFFER FROM THE ABOVE, FINAL THRUST BLOCK SIZES TO BE OBTAINED FROM THE ENGINEER.

PRESSURE (MPa)		0,3				0,6				0,9				1,2			
DIAMETER		90	45	22,5	11,25	90	45	22,5	11,25	90	45	22,5	11,25	90	45	22,5	11,25
50	L	0.528	0.427	0.358	0.351	0.567	0.430	0.325	0.268	0.568	0.572	0.437	0.364	0.710	0.511	0.545	0.454
	X	0.225	0.184	0.143	0.102	0.266	0.225	0.184	0.143	0.307	0.225	0.184	0.143	0.307	0.266	0.184	0.143
	Y	0.275	0.225	0.175	0.125	0.325	0.275	0.225	0.175	0.375	0.275	0.225	0.175	0.375	0.325	0.225	0.175
75	L	0.598	0.590	0.441	0.356	0.705	0.639	0.450	0.330	0.939	0.648	0.599	0.441	1.174	0.635	0.545	0.552
	X	0.317	0.235	0.194	0.153	0.358	0.276	0.235	0.194	0.358	0.317	0.235	0.194	0.358	0.358	0.276	0.194
	Y	0.388	0.287	0.237	0.187	0.438	0.337	0.287	0.237	0.438	0.388	0.287	0.237	0.438	0.438	0.337	0.237
90 – 110	L	0.789	0.706	0.489	0.354	1.183	0.641	0.540	0.529	1.278	0.854	0.550	0.491	1.321	1.067	0.689	0.615
	X	0.368	0.286	0.245	0.204	0.368	0.368	0.286	0.204	0.409	0.368	0.327	0.245	0.450	0.368	0.327	0.245
	Y	0.450	0.350	0.300	0.250	0.450	0.450	0.350	0.250	0.500	0.450	0.400	0.300	0.550	0.450	0.400	0.300
125	L	1.167	0.631	0.524	0.503	1.425	0.947	0.607	0.531	1.578	1.264	0.644	0.527	1.664	1.286	0.805	0.658
	X	0.378	0.378	0.297	0.215	0.419	0.378	0.337	0.256	0.460	0.378	0.378	0.297	0.501	0.419	0.378	0.297
	Y	0.462	0.462	0.362	0.262	0.513	0.462	0.412	0.312	0.563	0.462	0.462	0.362	0.613	0.513	0.462	0.362
150	L	1.304	0.862	0.706	0.472	1.631	1.293	0.659	0.532	1.840	1.412	0.879	0.708	1.972	1.471	1.099	0.689
	X	0.429	0.389	0.307	0.266	0.470	0.389	0.389	0.307	0.511	0.429	0.389	0.307	0.552	0.470	0.389	0.348
	Y	0.525	0.475	0.375	0.325	0.575	0.475	0.475	0.375	0.625	0.525	0.475	0.375	0.675	0.575	0.475	0.425
200	L	1.775	1.383	0.705	0.554	1.956	1.715	1.058	0.656	2.272	1.637	1.411	0.708	2.496	2.047	1.457	0.886
	X	0.491	0.409	0.409	0.327	0.573	0.450	0.409	0.368	0.614	0.532	0.409	0.409	0.654	0.532	0.450	0.409
	Y	0.600	0.500	0.500	0.400	0.700	0.550	0.500	0.450	0.750	0.650	0.500	0.500	0.800	0.650	0.550	0.500
250	L	1.900	1.634	1.000	0.766	2.201	1.779	1.499	0.753	2.608	2.056	1.667	1.004	2.917	2.249	1.763	1.255
	X	0.593	0.470	0.429	0.348	0.675	0.552	0.429	0.429	0.716	0.593	0.470	0.429	0.757	0.634	0.511	0.429
	Y	0.725	0.575	0.525	0.425	0.825	0.675	0.525	0.525	0.875	0.725	0.575	0.525	0.925	0.775	0.625	0.525
300	L	2.247	1.842	1.311	0.797	2.663	2.075	1.653	0.989	2.876	2.432	1.878	1.318	3.260	2.693	2.024	1.647
	X	0.654	0.532	0.450	0.409	0.736	0.614	0.491	0.450	0.818	0.654	0.532	0.450	0.859	0.695	0.573	0.450
	Y	0.800	0.650	0.550	0.500	0.900	0.750	0.600	0.550	1.000	0.800	0.650	0.550	1.050	0.850	0.700	0.550
350	L	2.556	2.015	1.633	0.820	3.088	2.334	1.777	1.231	3.387	2.767	2.055	1.641	3.544	2.785	2.247	1.736
	X	0.716	0.593	0.470	0.470	0.798	0.675	0.552	0.470	0.879	0.716	0.593	0.470	0.961	0.798	0.634	0.511
	Y	0.875	0.725	0.575	0.575	0.975	0.825	0.675	0.575	1.075	0.875	0.725	0.575	1.175	0.975	0.775	0.625
400	L	2.832	2.161	1.669	0.984	3.169	2.562	2.159	1.477	3.550	2.767	2.204	1.677	3.781	3.137	2.441	1.808
	X	0.777	0.654	0.532	0.491	0.900	0.736	0.573	0.491	0.982	0.818	0.654	0.532	1.063	0.859	0.695	0.573
	Y	0.950	0.800	0.650	0.600	1.100	0.900	0.700	0.600	1.200	1.000	0.800	0.650	1.300	1.050	0.850	0.700
450	L	3.079	2.572	1.959	1.148	3.515	2.763	2.229	1.722	3.980	3.030	2.623	1.969	4.278	3.458	2.608	2.133
	X	0.838	0.675	0.552	0.511	0.961	0.798	0.634	0.511	1.043	0.879	0.675	0.552	1.125	0.920	0.757	0.593
	Y	1.025	0.825	0.675	0.625	1.175	0.975	0.775	0.625	1.275	1.075	0.825	0.675	1.375	1.125	0.925	0.725
500	L	3.301	2.668	1.959	1.310	3.834	2.941	2.288	1.965	4.075	3.269	2.721	1.968	4.438	3.753	2.755	2.163
	X	0.900	0.736	0.614	0.532	1.023	0.859	0.695	0.532	1.145	0.941	0.736	0.614	1.227	0.982	0.818	0.654
	Y	1.100	0.900	0.750	0.650	1.250	1.050	0.850	0.650	1.400	1.150	0.900	0.750	1.500	1.200	1.000	0.800

PRESSURE (MPa)		1,6				1,8				2,0				2,5			
DIAMETER		90	45	22,5	11,25	90	45	22,5	11,25	90	45	22,5	11,25	90	45	22,5	11,25
50	L	0.700	0.649	0.461	0.348	0.774	0.539	0.539	0.383	0.847	0.589	0.559	0.418	1.032	0.717	0.487	0.510
	X	0.348	0.266	0.225	0.184	0.348	0.307	0.307	0.184	0.348	0.307	0.225	0.184	0.348	0.307	0.266	0.184
	Y	0.425	0.325	0.275	0.225	0.425	0.375	0.375	0.225	0.425	0.375	0.275	0.225	0.425	0.375	0.325	0.225
75	L	1.197	0.804	0.689	0.478	1.323	0.890	0.890	0.528	1.450	0.974	0.633	0.578	1.452	1.186	0.604	0.510
	X	0.399	0.358	0.276	0.235	0.399	0.358	0.358	0.235	0.399	0.358	0.317	0.235	0.440	0.358	0.358	0.276
	Y	0.488	0.438	0.337	0.287	0.488	0.438	0.438	0.287	0.488	0.438	0.338	0.287	0.538	0.438	0.438	0.337
90 – 110	L	1.672	1.352	0.689	0.572	1.553	1.210	1.210	0.633	1.701	1.325	0.834	0.697	1.764	1.334	1.016	0.646
	X	0.450	0.368	0.368	0.286	0.491	0.409	0.409	0.286	0.491	0.409	0.368	0.268	0.532	0.450	0.368	0.327
	Y	0.550	0.450	0.450	0.350	0.600	0.500	0.500	0.350	0.600	0.500	0.450	0.350	0.650	0.550	0.450	0.400
125	L	1.801	1.629	1.019	0.644	1.991	1.494	1.494	0.712	1.885	1.637	1.234	0.780	2.004	1.680	1.224	0.755
	X	0.542	0.419	0.378	0.337	0.542	0.460	0.460	0.337	0.583	0.460	0.378	0.337	0.624	0.501	0.419	0.378
	Y	0.663	0.513	0.462	0.412	0.663	0.563	0.563	0.412	0.713	0.563	0.462	0.412	0.763	0.613	0.513	0.462
150	L	2.166	1.577	1.392	0.699	2.095	1.743	1.743	0.773	2.294	1.909	1.379	0.847	2.465	1.993	1.400	1.031
	X	0.593	0.511	0.389	0.389	0.634	0.511	0.511	0.389	0.634	0.511	0.429	0.389	0.675	0.552	0.470	0.389
	Y	0.725	0.625	0.475	0.475	0.775	0.625	0.625	0.475	0.775	0.625	0.525	0.475	0.825	0.675	0.575	0.475
200	L	2.498	1.947	1.551	1.122	2.761	2.152	2.152	1.240	2.714	2.357	1.877	1.358	2.982	2.522	1.947	1.366
	X	0.736	0.614	0.491	0.409	0.736	0.614	0.614	0.409	0.777	0.614	0.491	0.409	0.818	0.654	0.532	0.450
	Y	0.900	0.750	0.600	0.500	0.900	0.750	0.750	0.500	0.950	0.750	0.600	0.500	1.000	0.800	0.650	0.550
250	L	3.010	2.514	1.915	1.590	3.024	2.470	2.470	1.465	3.312	2.706	2.009	1.605	3.375	2.653	2.141	1.653
	X	0.838	0.675	0.552	0.429	0.879	0.716	0.716	0.470	0.879	0.716	0.593	0.470	0.961	0.798	0.634	0.511
	Y	1.025	0.825	0.675	0.525	1.075	0.875	0.875	0.575	1.075	0.875	0.725	0.575	1.175	0.975	0.775	0.625
300	L	3.443	2.730	2.233	1.753	3.495	3.018	3.018	1.651	3.527	2.983	2.376	1.808	3.970	3.294	2.562	1.898
	X	0.941	0.777	0.614	0.491	0.982	0.777	0.777	0.532	1.023	0.818	0.654	0.532	1.063	0.859	0.695	0.573
	Y	1.150	0.950	0.750	0.600	1.200	0.950	0.950	0.650	1.250	1.000	0.800	0.650	1.300	1.050	0.850	0.700
350	L	3.812	3.192	2.512	1.885	3.902	3.208	3.208	2.084	3.968	3.208	2.704	1.978	4.498	3.580	2.650	2.108
	X	1.043	0.838	0.675	0.552	1.084	0.879	0.879	0.552	1.125	0.920	0.716	0.593	1.166	0.961	0.798	0.634
	Y	1.275	1.025	0.825	0.675	1.325	1.075	1.075	0.675	1.375	1.125	0.875	0.725	1.425	1.175	0.975	0.775
400	L	4.130	3.312	2.757	1.995	4.255	3.362	3.362	2.205	4.355	3.683	2.995	2.122	4.660	3.820	2.985	2.289
	X	1.145	0.941	0.736	0.613	1.186	0.982	0.982	0.613	1.227	0.982	0.777	0.654	1.309	1.063	0.859	0.695
	Y	1.400	1.150	0.900	0.750	1.450	1.200	1.200	0.750	1.500	1.200	0.950	0.800	1.600	1.300	1.050	0.850
450	L	4.405	3.695	2.973	2.364	4.565	3.770	3.770	2.306	4.999	3.823	3.257	2.526	5.074	4.322	3.291	2.733
	X	1.247	1.002	0.798	0.634	1.288	1.043	1.043	0.675	1.288	1.084	0.838	0.675	1.411	1.125	0.920	0.716
	Y	1.525	1.225	0.975	0.775	1.575	1.275	1.275	0.825	1.575	1.325	1.025	0.825	1.725	1.375	1.125	0.875
500	L	4.940	4.050	3.165	2.427	5.135	4.151	4.151	2.682	5.298	4.227	3.491	2.620	5.446	4.483	3.571	2.863
	X	1.309	1.063	0.859	0.695	1.350	1.104	1.104	0.695	1.391	1.145	0.900	0.736	1.513	1.227	0.982	0.777
	Y	1.600	1.300	1.050	0.850	1.650	1.350	1.100	0.850	1.700	1.400	1.100	0.900	1.850	1.500	1.200	0.950

general notes

The contractor is to keep a full set of drawings on site, contractor is responsible for the correct setting out of the building on site with reference to boundaries and building lines, contractor to verify all levels and dimensions on site and check same against architects and engineers drawings before commencing work. Figured dimensions to be used in preference to scaled dimensions, large scale details to be used were available, errors, discrepancies or omissions are to be reported to the architect immediately for clarification before work is undertaken.

These drawings are to be read in conjunction with structural engineers, civil engineers, mechanical engineer's or plumbing consultant's drawings were specified.

All work and material used to comply with SABS standards and NATIONAL BUILDING REGULATIONS ACT 103 of 1977 and amendments thereto as well as the by-laws of the relevant local authority.

All new construction HEALTH AND SAFETY Regulations to be strictly complied with.

revisions

No	Date	Amendment	DPW

Copyright vests in the Department of Public Works

PROJECT TEAM

KCS CONSULTANTS — 1 Malta Street, Glendinningvale, Port Elizabeth, 041 373 6729, Keith Simon, 082 873 7303, kcsimon@kcs.co.za

Structural Engineers : ZUTARI — Zutari Consulting Engineers, 1 Pearce Street, Berea, East London, 043 721 0900, Kate Routledge, 076 2514907, eastlondon@zutari.com

Architects : BNM ARCHITECTS PROJECT MANAGERS — BNM Architects, Suite 1 Lyndon, 114 Park Drive, Central, Port Elizabeth, 041 585-2125, Cobus Lombard, 072 668 3980, cobusl@ud.bnm.co.za

Quantity Surveyors : LATITUDE QUANTITY SURVEYORS — Latitude Quantity Surveyors, 123 Western Avenue, Vincent, East London, Pierre Webber, 082 926 0675, pwebber@latitudeqs.co.za

Electrical & Mechanical Engineers : KCE — Kuyaduduma Consulting Engineers, 30 East Bend Road, Beacon Bay, East London, 043 748 5711, Dean Posthumus, 082 464 6738, dean@kceng.co.za

CONSULTANT

bvi ENGINEERING PROCUREMENT MANAGEMENT

P.O BOX 11015
SOUTHERN WOOD
EAST LONDON
5213

56 BONZA BAY ROAD
BEACON BAY
5241

TEL: (043) 722 2738
FAX: (043) 743 7698
Email: els@bvi.co.za

ISSUED FOR TENDER

east london idz
business streamlined

DISCIPLINE
CIVIL

SERVICE

DIAMER TRUCKS SOUTH AFRICA
ZONE - 1A PROPOSAL

WCS NUMBER:

DRAWING TITLE
PIPE FITTINGS & THRUST BLOCK DETAILS

REF NO.	34931	DESIGNED	M. McALLISTER
SCALE	AS SHOWN	DRAWN	M. McALLISTER
DATE	2024/10	CHECKED	W. DE LANGE/M.STEYN

DPW DRAWING NUMBER:

34931-DET-006