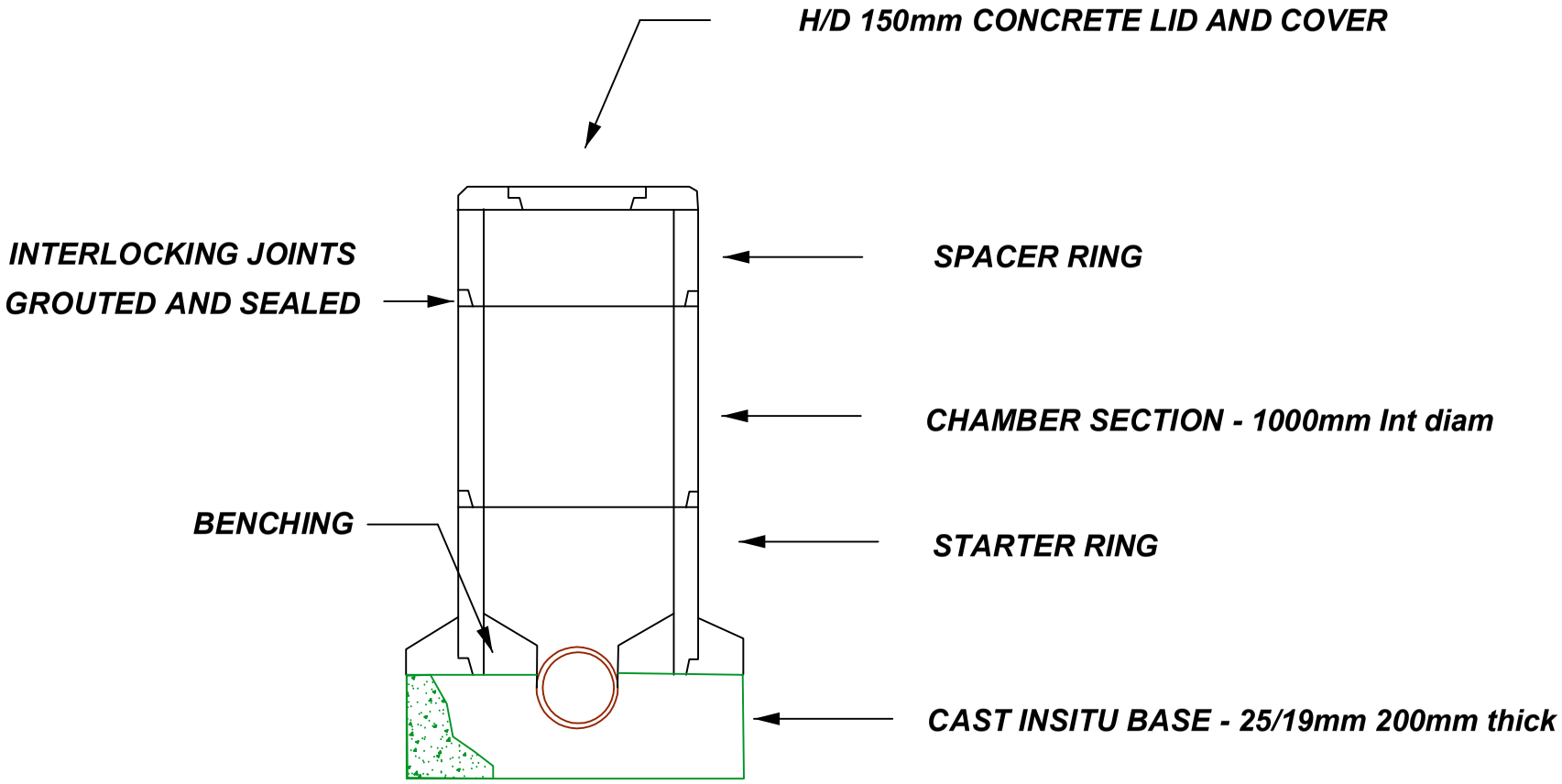

TYPICAL MANHOLE DETAIL

NOTES

ALL DIMENSIONS AND LEVELS ARE TO BE VERIFIED ON SITE PRIOR TO COMMENCEMENT, SETTING OUT, WORKSHOP DRAWINGS OR CONSTRUCTION.

FIGURED DIMENSIONS ONLY TO BE USED. DRAWINGS ARE NOT TO BE SCALED.

DISCREPANCIES, ERRORS AND OMISSIONS ARE TO BE BROUGHT TO THE ENGINEERS ATTENTION IMMEDIATELY THEY BECOME EVIDENT.

SHOP DRAWINGS TO BE SUBMITTED FOR APPROVAL PRIOR TO MANUFACTURE OR INSTALLATION.

COPYRIGHT AND RIGHT OF REPRODUCTION OF THIS DRAWING OR PORTION THEREOF IS RESERVED BY THE ENGINEERS.

No	REVISION DESCRIPTION	DATE

CAD Drawing Data -

KUDEC Engineering Development Services

P O BOX 399
GONUBIE
5256
TEL : (043) 740 1045
FAX : (043) 740 5185
e-mail : bing@iafrica.co

Project
CONDOM FACTORY FOR NULATEX SA

Location
ERF 60930 EAST LONDON IDZ

Title
TYPICAL SEWER MANHOLE

Scale	Date	Drawn	Checked
1:75 & 1:25	20/04/2018	AS	B. Kockd

Drawing No. **K030-24**

Revision